# BIALON MB-10S0

Consumption data acquisition module with S0 interface for M-Bus networks

- M-BUS pulse acquisition module with 10 S0 inputs
- Integration of meters with conventional pulse interfaces
- Freely selectable pulse values for S0 inputs
- Flexible configuration via the M-Bus
- Meter data are stored in case of power outage
- Baud rates 300, 2400, 9600 baud
- M-Bus protocol as per DIN EN13757-2 and 3, (EN1434-3)
- S0 interface as per DIN 43864
- Primary and secondary address assignment
- Top hat rail installation

Optionally available with 24 V DC or 230 V AC voltage supply

The M-Bus S0 converter BIALON MB-10S0 is used for connecting consumption meters with S0 interfaces to the M-Bus system. The meter pulses acquired by the S0 meters are aggregated in the MB-10S0 module and provided on the M-Bus on request.
The value of the S0 pulse inputs can be freely configured on the M-Bus. The parameters are stored in the internal, non-volatile memory.

In case of a power supply outage, the S0 meter data are stored in non-volatile memory (EEPROM).

**Order details**

| Description | Order number |
|---|---|
| BIALON MB-10S0 230 V AC | 095250 |
| BIALON MB-10S0 24 V AC/DC | 095251 |

STV Automation
A Division of STV Electronic GmbH
Hellweg 203-205
D-33758 Schloss Holte, Germany

Tel.: +49 (0) 5207/9131-0
Fax: +49 (0) 5207/9131-18
Email: info@stv-automation.de
Website: www.stv-automation.de

## Properties of the M-Bus system:

- standardised European field bus (DIN EN13757-2 and 3; EN1434-3)
- Wire pair bus with power supply to bus nodes (M-Bus standard load = 1.5 mA)
- M-Bus is reverse polarity protected
- Acquisition of consumption data (heat, water, gas, electricity, etc.)
- Communication with M-Bus sensors and actuators supported
- Energy monitoring and optimisation
- For use in industrial and domestic applications
- No special requirements for the bus cable (installation wiring or phone wire sufficient)
- Optional wiring topology (star, tree, bus)
- Long range (up to several kilometres)
- Good availability of system components
- Good cost/performance ratio

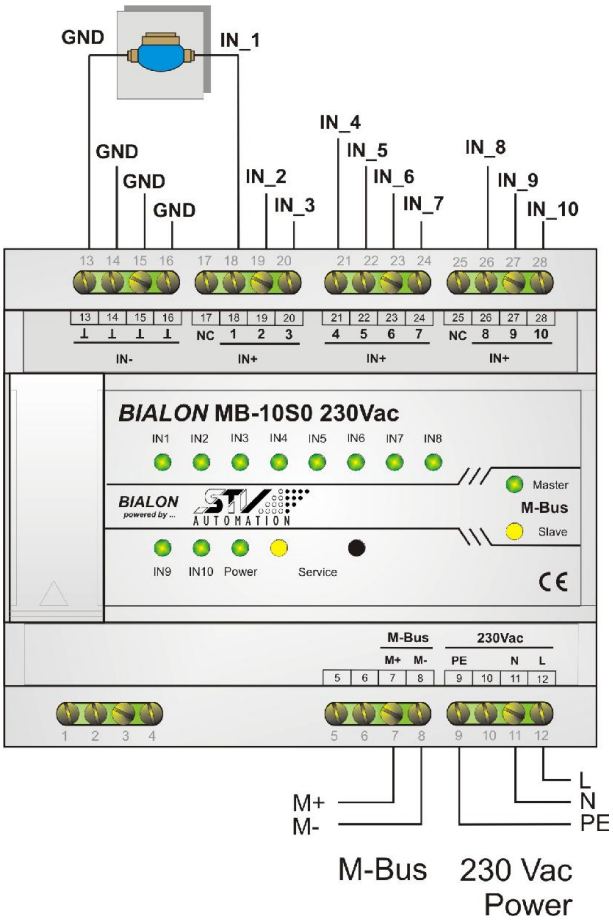


The **S0 interface**
(DIN EN 62053-31) is a hardware interface for acquiring measured values from:

- Water meters
- Gas meters
- Heating meters
- Electricity meters

by transferring weighted S0 pulses.

**Technical data**

| | |
|---|---|
| Supply voltage | 110 V to 250 V AC<br>or<br>20 V – 24 V AC/DC |
| Inputs | 10x S0, as per DIN EN 62053-31 |
| Remote reading | M-Bus |
| Data storage | min. of 10 years and 10,000 cycles in EEPROM |
| Processor | Cortex M4 and PIC |
| Displays | LED green: 10x LED for 10x S0 interface<br>LED green: power on<br>LED yellow: Service; write protect<br>LED green: Master sending message<br>LED yellow: Slave sending messages |
| Installation | Service TA – remove write protect |
| Transmission media | Wire pair (M-Bus) |
| Operating temperature | 0 ... 40 °C |
| Relative humidity | 0 ... 90 % (non-condensing) |
| Housing | as per EN 50022 for installation on DIN support rails, 6 separation units |
| Protection type | IP 20 as per DIN EN 60529 |
| Dimensions (L x W x H) | 108 x 90 x 66 mm (6 SU) |


Technical changes reserved
Copyright: reproduction of this document in unaltered form is permitted. Changes to the document are only permitted with the express permission of STV Electronics GmbH